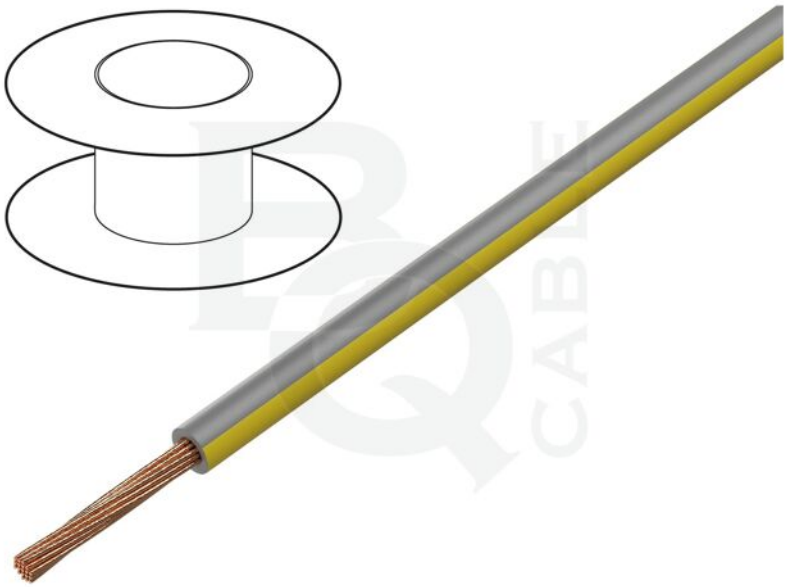

Symbol:	LGY2.5-GY/YL
Product groups:	Single Core Cables

Product specifications

Type of wire:	assembly
Kind of cable:	H05V-K, LgY
Core structure:	stranded
Kind of core:	Cu
Number of cores:	1
Core section:	2.5mm^2
Wire insulation material:	PVC
Insulation colour:	grey-yellow
Rated voltage:	0.3kV, 0.5kV
Package contents:	50m

Flexibility class:	5
Cable external diameter:	3mm
Cable structure:	1x2.5mm^2
Operating temperature:	-40...105°C
Trade name:	single core cable

Additional information

Gross weight:	0.028 kg